FATEK® AUTOMATION CORPORATION

26FL., NO. 29, SEC. 2, JUNGJENG E. RD., DANSHUEI DIST.,
NEW TAIPEI CITY 25170, TAIWAN, R.O.C.

TEL : +886-2-2808-2192
FAX : +886-2-2809-2618
E-mail : sales@fatek.com
tech@fatek.com
Website : www.fatek.com

The specifications are subject to change without prior notice.

B1-CV2-06-2018

FATEK® The Brand You Can Rely On

Since 1992

Economical and High-Quality PLC

FATEK B1/B1z Series Micro-Programmable Controllers

www.fatek.com

Be impressed with the high quality!

Features

Core Technology of the Advanced SoC

With advanced software, hardware techniques and over 20 years experience in the automation industry, FATEK has integrated its own SoC CPU (Systems on Chip), hardware logic solver (HLS), hardware high-speed counter/timer, NC positioning, communication, FLASH, and SRAM into a tiny BGA chip. This is an industry first making FATEK a market leader in micro PLC design!

Compact and Rugged

Common components are now integrated into the SoC, so the processor and I/O board layer can now be manufactured on a single PCB substantially reducing the overall size and increasing the reliability of the B1/B1z series controllers!

High Quality and High Reliability

With the streamline hardware design and the highly integrated SoC technology, the quantity of the components required in the B1/B1z series PLC is significantly reduced. With the combination of the high quality parts rigorous quality control procedures, FATEK creates a high quality PLC for today's industry.

Competitive Low Price

The streamline design of SoC technology significantly reduces the hardware costs. The B1/B1z series PLC incorporates the most sophisticated manufacturing process and high quality two-layer board design, and have better noise immunity than other four-layer PLC board design. This makes the B1/B1z PLC very price-competitive in today's cost-conscious PLC market!

Easy to Use, Common Instruction Sets

The B1/B1z series PLC is an economic type PLC without any compromise to its performance. It also provides all the easy to use yet powerful FBs series PLC's instructions. Both B1/B1z and FBs series PLC are programmed by the same utility software - Winproladder.

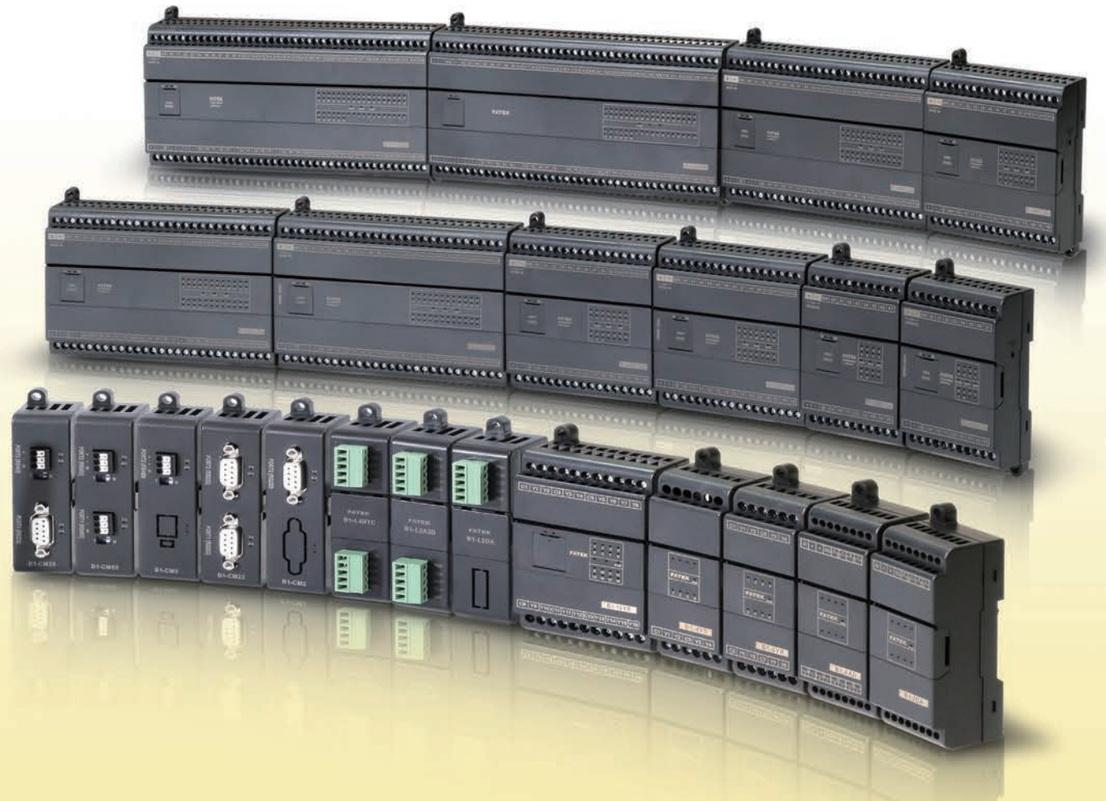

System Configuration

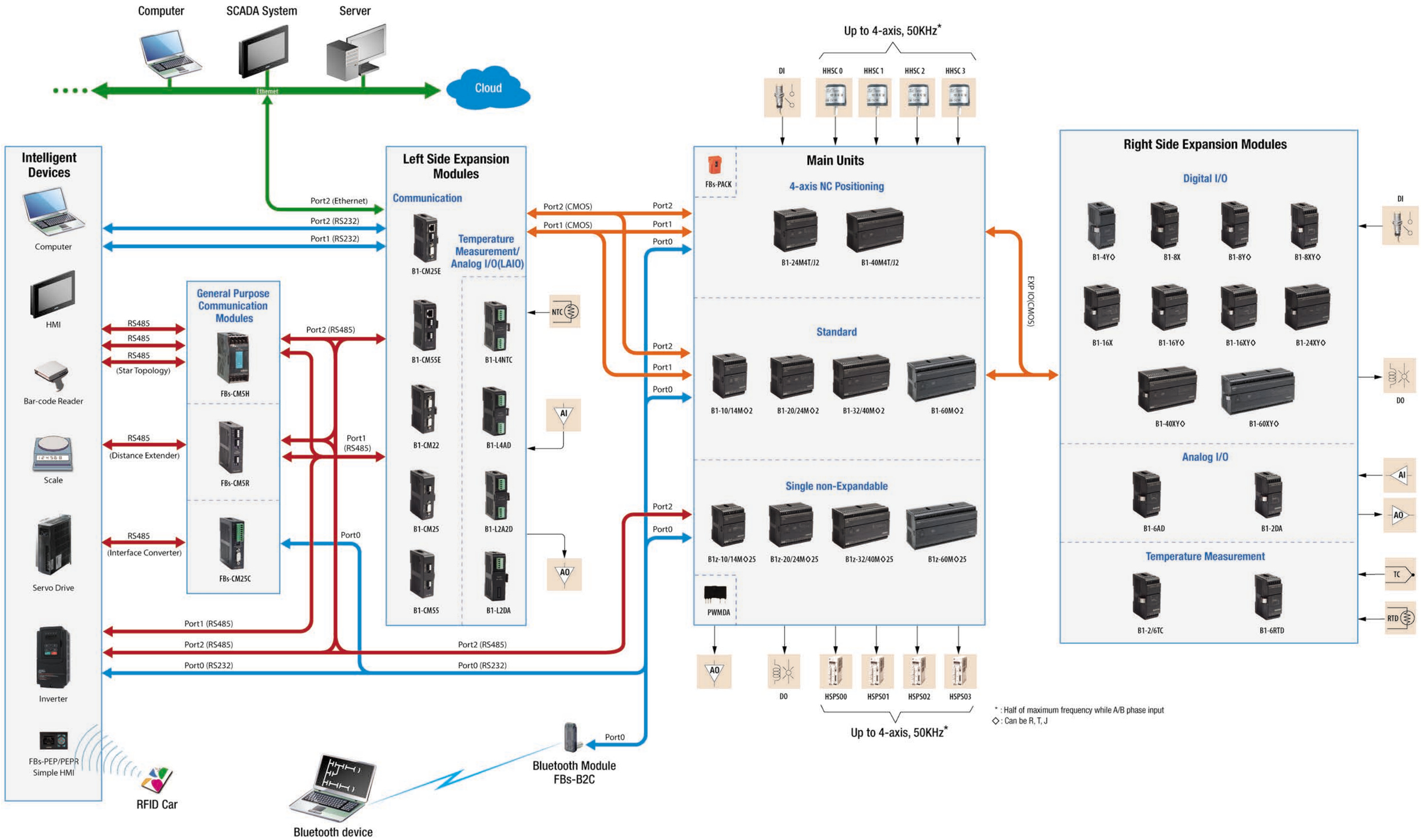

* : Half of maximum frequency while A/B phase input
◇ : Can be R, T, J

Environmental Specifications

Item		Specification	Note
Storage temperature		-25°~70°C	
Operating ambient temperature		0°~55°C	
Relative humidity		5~95%	Non-condensing, RH-2
Pollution resistance		Degree II	
Corrosion resistance		Based on IEC-68 standard	
Altitude		≤2000m	
Vibration resistance	Fixd by DIN rail	0.5G, 2 hours for each direction of 3 axes	
	Fasten by screw	2G, 2 hours for each direction of 3 axes	
Shock resistance		10G, three times for each direction of 3 axes	
Noise resistance		1500Vp-p, pulse width 1μS	
Withstand voltage		500VAC, 1 minute (DC)	L, N to any terminal
		1500VAC, 1 minute (AC)	

DC Model Power Specifications

Specification / Item	10/14 Points Main Unit	20/24 Points Main Unit	32/40 Points Main Unit	60 Points Main Unit
Input voltage	24VDC,-15%/+20%			
Max. power capability	2.5W/3W	3.5W/4W	4.5W/5W	6W
Inrush current	20A@24VDC			
Allowable power momentary interruption time	<2ms			
Fuse rating	2A,125VDC			

AC Model Power Specifications (custom products)

Specification / Item	10/14 Ponits Main Unit	20/24 Ponits Main Unit	32/40 Ponits Main Unit	60 Ponits Main Unit
Input power/Frequency	85 ~ 264VAC / 50 ~ 60Hz			
Max. power capability (Built-in sensor power supply)	21W			
Inrush current	20A@264VAC			
Allowable power momentary interruption time	<20mS			
Fuse rating	2A, 250VAC			

Main Unit Specifications

*1 : Default, changeable by user
*2 : LAIO and L4NTC module will occupy Port1

Specification / Item				B1	B1z	Note
Execution speed				0.33uS ／ Sequential instruction		
Memory capacity		Program (Word)		7936 Words	3840 Words	
		Comment (Byte)		8K Bytes	4K Bytes	
Program memory				FLASH ROM or SRAM+Lithium battery Back-up		
Sequential instruction				36 instructions		
Function instruction				326 instructions(126 kinds)	323 instructions(123 kinds)	Include derivative instructions
Flow chart command (SFC)				4 instructions		
Communication Interface	Port0 (RS232) Speed 4.8k~115.2kbps			Built- in		Default setting of each port is 906 kbps, Port1~2 provides FATEK or Modbus RTU/ASCII or user defined communication protocol
	Port1~2 (RS232, RS485, Ethernet) Speed 4.8k~921.6kbps			Expandable Port1 and Port2	Built-in Port2(RS485) No expandable	
	Maximum link stations			254		
Digital (Bit status)	X	Input contact (DI)		X+Y=128	6 / 8 / 12 / 14 / 20 / 24 / 36	Corresponding to external digital input
	Y	Output relay (DO)			4 / 6 / 8 / 10 / 12 / 16 / 24	Corresponds to external digital output
	TR	Temporary relay		TR0~TR39 (40)		
	M	Internal relay	Non-retentive	M0~M799 (800)*1		Can be configured as retentive type
				M1400~M1911 (512)		
			Retentive	M800~M1399 (600)*1		Can be configured as non-retentive
		Special relay		M1912~M2001 (90)		

(Continue)

Specification / Item				B1	B1z	Note
Digital (Bit status)	S	Step relay	Non-retentive	S0~S499 (500)*1		S20~S499 can be configures as retentive type
			Retentive	S500~S999 (500)*1		Can be configures as non-retentive type
	T	Timer "Time-Up" status contact		T0~T255 (256)		
	C	Counter "Count-Up" status contact		C0~C255 (256)		
Register (Word data)	TMR	Time current value register	0.01S Time base	T0~T49 (50)*1		T0~T255 members for each time base can be adjusted
			0.1S Time base	T50~T199 (150)*1		
			1S Time base	T200~T255 (56)*1		
	CTR	Counter current value register 16-bit	Retentive	C0~C139 (140)*1		Can be configured as non-retentive type
			Non-retentive	C140~C199 (60)*1		Can be configured as retentive type
		Counter current value register 32-bit	Retentive	C200~C239 (40)*1		Can be configured as non-retentive type
			Non-retentive	C240~C255 (16)*1		Can be configured as retentive type
	HR DR	Data register	Retentive	R0~R2999 (3000)*1		Can be configured as non-retentive type
				D0~D3999 (4000)		
				R5000~R8071 (3072)*1		When not configured as ROR, it can serve normal register (for read/write)
			Non-retentive	R3000~R3839 (840)*1		Can be configured as retentive type
	ROR		Read only register	R5000~R8071 can be set as ROR, default setting is (0)*1		ROR is stored in special ROR area and not occupy program space
	FR		File register	F0~F8191 (8192)		Saved/retrieved via dedicated instruction
	IR	Input register		R3840~R3857 (18)	–	Corresponding to the external numerical input
	OR	Output register		R3904~R3921 (18)	–	Corresponding to the external numerical output
	SR	Special system register		R3968~R4167 (200)		
				D4000~D4095 (96)		D4072~4075(4)corresponds LAIO Module inputs*2 D4076~4077(4)corresponds LAIO Module outputs*2
		0.1mS High-speed timer register		R4152~R4154 (3)		
		High-speed counter register	Hardware(4 sets)	DR4096~DR4110 (4x4)		
			Software(4sets)	DR4112~DR4126 (4x4)		
		Calendar register		R4128 (sec) R4129 (min) R4130 (hour) R4131 (day) R4132 (month) R4133 (year) R4134 (week)	–	
	XR	Index register		V、Z (2), P0~P9 (10)		
Interrupt control		External interrupt control		32 interrupts(16 points input positive/negative edge)		Only main unit input points
		Internal interrupt control		8 interrupts (1、2、3、4、5、10、50、100mS)		
0.1mS high-speed timer				1(16-bit), 4(32-bit, share with HHSC)		
High-speed counter HSC		Hardware high-speed counter (HHSC)/32-bit	No. of channel	Up to 4		Total number of HHSC and SHSC is 8 HHSC can be converted into 32-bit/0.1mS time base High-Speed Timer(HST) Half of maximum frequency while A/B phase input
			Counting mode	8 modes (U/D、U/Dx2、P/R、P/Rx2、A/B、A/Bx2、A/Bx3、A/Bx4)		
			Counting frequency	Maximum is 50KHz (Singled-end input)		
		Software high-speed counter(SHSC)/32-bit	No. of channel	Up to 4		
			Counting mode	3 modes (U/D、P/R、A/B)		
			Counting frequency	Maximum sum up to 5KHz		
NC position pulse output (HSPSO)		Number of axis		Up to 4		
		Output frequency		Maximum is 50KHz (Singled-end input)		Half of the maximum while A/B phase output
		Pulse output mode		3 modes (U/D、P/R、A/B)		
		Programming method		Dedicated position language		
		Interpolation		Maximum 4 axes linear interpolation		
HSPWM output		Number of points		Up to 4		
		Output frequency		72Hz~18.432KHz (with 0.1%resolution) 720Hz~184.3KHz(with 1%resolution)		
Captured input		Points		Maximum 36 points (All inputs in main unit come with this feature)		
		Minimum captured pulse width		>10μS (for Ultra high/high speed input)		
				>47μS (for medium speed input)		
				>470μS (for medium/low speed input)		
Digital filter			X0～X15	Adjustable frequency 14KHz~1.8MHz		Chosen by frequency at high frequency
				Adjustable time constant 0.1~1.5mS/1~15mS(unit: 0.1mS/1mS)		Chosen by time constant at low frequency
			X16～X35	Time constant 1~15mS adjustable(unit: 1mS)		

Digital Input (DI) Specification

* : Half of maximum frequency while A/B phase input

Specification \ Item		Main Unit			Extension module	Note
		High speed(HHSC)	Medium speed (SHSC)	Low speed (≥ X16)	Low speed	
Maximum input frequency		50KHz*	Total 5KHz	–	–	HHSC: Hardware High speed counter SHSC: Software High speed counter
Input signal voltage		24VDC±10%				
Threshold current	ON	> 4mA		> 2.3mA		
	OFF	< 1.5mA		< 0.9mA		
Maximum input current		7.6mA		4.5mA		
Input status indication		Displayed by LED: light when "ON", dark when "OFF"				
Isolation method		Optical isolation, 500VAC, 1 minute				
SINK/SOURCE selection		Select by wiring methods (internal common terminal S/S and external common wiring)				
Noise filtering methods		AHF(0.42us)+DHF(14KHz~1.8MHz or 0.1~15ms)		AHF(0.2ms)+DHF(1~15ms)	AHF(1mS)	DHF: Digital Hardware Filter AHF: Analog Hardware Filter

Wiring of 24VDC single-end SINK input

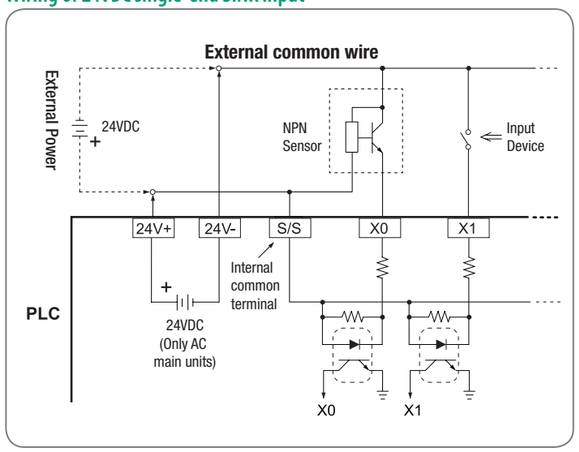

Wiring of 24VDC single-end SOURCE input

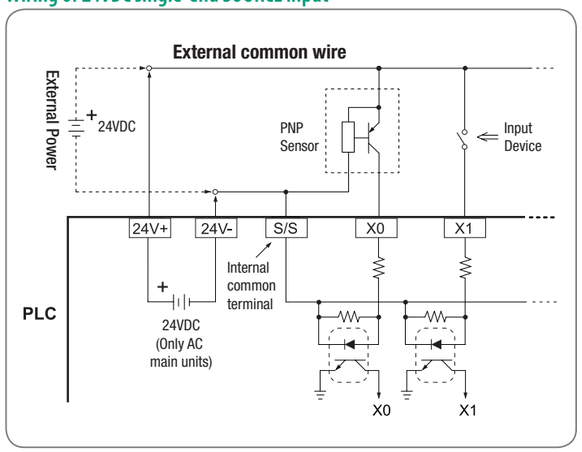

Digital Output (DO) Specifications

* : Half of maximum frequency while A/B phase output

Specification \ Item		High speed transistor output (Main unit HSPSO)	Low speed transistor output	Single-end relay output	Note
Maximum output frequency		50KHz*	—	—	HSPSO： Hardware High Speed Pulse Output
Working voltage		5~30VDC		<250VAC/30VDC	
Maximum load current	Resistive	0.3A/0.1A (M4T/J)	0.5A	2A/single, 4A/common	
	Inductive			80VA(AC)/24VA(DC)	
Maximum voltage drop/conducting resistance (initial)		0.5V	1V	30mΩ (@1A, 6VDC)	
Minimum load		—		2mA/DC power	
Leakage current		< 0.1mA/30VDC		—	
Maximum output delay time	ON → OFF	15μS		10mS	
	OFF → ON	30μS			
Output status indication		Displayed by LED: light when "ON", dark when "OFF"			
Isolation method		Optical isolation, 500VAC, 1 minute		Electromagnetic isolation 1500VAC, 1 minute	

Wiring of relay single-end output

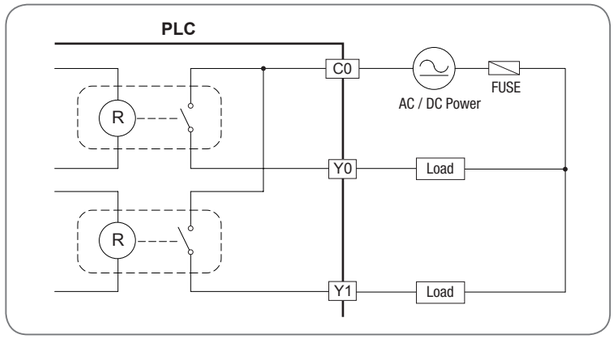

Wiring of transistor single-end SINK output

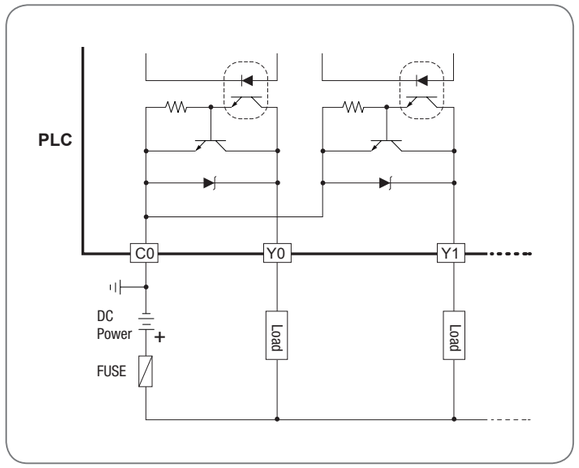

Wiring of transistor single-end SOURCE output

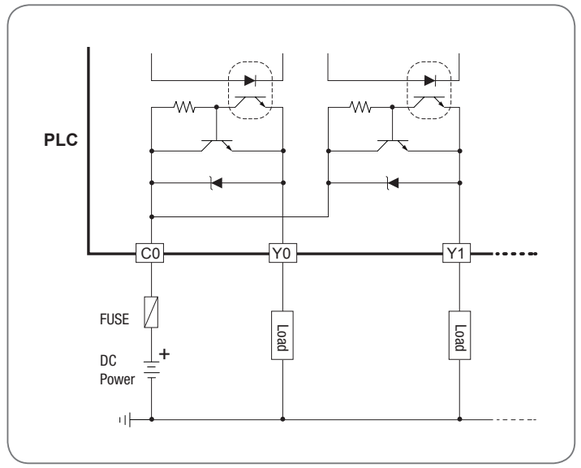

Wiring of M4T main unit Y0~Y7 transistor single-end SINK output

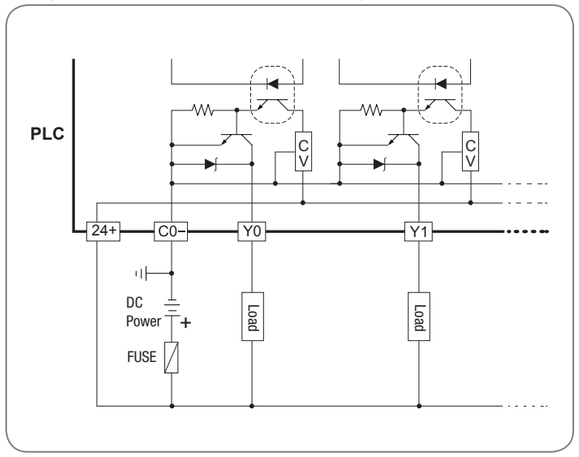

Wiring of M4J main unit Y0~Y7 transistor single-end SOURCE output

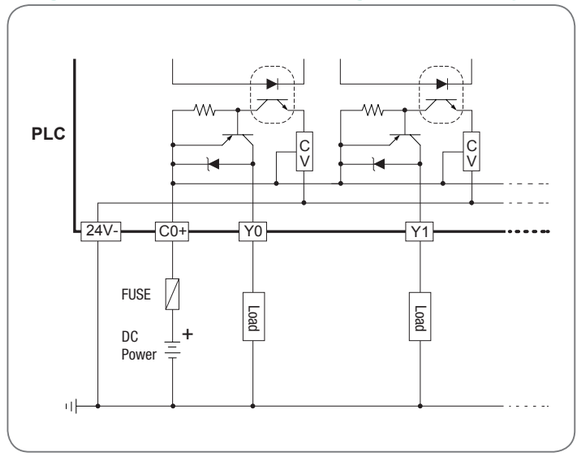

Model Specification

B1z Main Units

Spec. \ Model			B1z-10MR	B1z-10M(T/J)	B1z-14MR	B1z-14M(T/J)	B1z-20MR	B1z-20M(T/J)	B1z-24MR	B1z-24M(T/J)
Digital input	24VDC	High speed (50KHz)	4 points (2-axis single phase or A/B phase)				6 points (3-axis single phase or A/B phase)		8 points (4-axis single phase or A/B phase)	
		Medium (Total 5KHz)	2 points		4 points		6 points		6 points	
		Low speed	—		—		—		—	
Digital Output	Relay		4 points	—	6 points	—	8 points	—	10 points	—
	Transistor (5~30 VDC)	High speed (50KHz)	—	2 points (1-axis single phase or A/B phase)	—	2 points (1-axis single phase or A/B phase)	—	4 points (2-axis single phase or A/B phase)	—	4 points (2-axis single phase or A/B phase)
		Low speed	—	2 points	—	4 points	—	4 points	—	6 points
Communication port		Built-in	2 ports (Port0:RS232, Port2:RS485)							
		Expandable	—							
Calendar			—							
Wiring mechanism			5mm European fixed terminal block							
Dimension			Figure 1 (Standard), Figure 2 (Slim)				Figure 3 (Standard), Figure 4 (Slim)			

(Continue)

Spec. \ Model			B1z-32MR	B1z-32M(T/J)	B1z-40MR	B1z-40M(T/J)	B1z-60MR	B1z-60M(T/J)
Digital input	24VDC	High speed (50KHz)	8 points (4-axis single phase or A/B phase)					
		Medium speed (Total 5KHz)	8 points					
		Low speed	4 points		8 points		20 points	
Digital Output	Relay		12	—	16	—	24	—
	Transistor (5~30 VDC)	High speed (50KHz)	—	6 points (3-axis single phase or A/B phase)	—	6 points (3-axis single phase or A/B phase)	—	8 points (4-axis single phase or A/B phase)
		Low speed	—	6 points	—	10 points	—	16 points
Communication port		Built-in	2 ports (Port0:RS232, Port2:RS485)					
		Expandable	—					
Calendar			—					
Wiring mechanism			5mm European fixed terminal block					
Dimension			Figure 5 (Standard), Figure 6 (Slim)				Figure 7 (Standard), Figure 8 (Slim)	

B1 Main Units

Spec. \ Model			B1-10MR	B1-10M(T/J)	B1-14MR	B1-14M(T/J)	B1-20MR	B1-20M(T/J)	B1-24MR	B1-24M(T/J)
Digital input	24VDC	High speed (50KHz)	4 points (2-axis single phase or A/B phase)				6 points (3-axis single phase or A/B phase)		8 points (4-axis single phase or A/B phase)	
		Medium (Total 5KHz)	2 points		4 points		6 points		6 points	
		Low speed	—		—		—		—	
Digital Output	Relay		4 points	—	6 points	—	8 points	—	10 points	—
	Transistor (5~30 VDC)	High speed (50KHz)	—	2 points (1-axis single phase or A/B phase)	—	2 points (1-axis single phase or A/B phase)	—	4 points (2-axis single phase or A/B phase)	—	4 points (2-axis single phase or A/B phase)
		Low speed	—	2 points	—	4 points	—	4 points	—	6 points
Communication port		Built-in	1 port (Port0:RS232)							
		Expandable	2 ports (Port1~2,RS485 or RS232 or Ethernet)							
Calendar			Built-in							
Wiring mechanism			5mm European fixed terminal block							
Dimension			Figure 1 (Standard), Figure 2 (Slim)				Figure 3 (Standard), Figure 4 (Slim)			

(Continue)

Spec. \ Model			B1-32MR	B1-32M(T/J)	B1-40MR	B1-40M(T/J)	B1-60MR	B1-60M(T/J)
Digital input	24VDC	High speed (50KHz)	8 points (4-axis single phase or A/B phase)					
		Medium (Total 5KHz)	8 points					
		Low speed	4 points		8 points		20 points	
Digital Output	Relay		12	—	16	—	24	—
	Transistor (5~30 VDC)	High speed (50KHz)	—	6 points (3-axis single phase or A/B phase)	—	6 points (3-axis single phase or A/B phase)	—	8 points (4-axis single phase or A/B phase)
		Low speed	—	6 points	—	10 points	—	16 points
Communication port		Built-in	1port (Port0:RS232)					
		Expandable	2 ports (Port1~2,RS485 or RS232 or Ethernet)					
Calendar			Built-in					
Wiring mechanism			5mm European fixed terminal block					
Dimension			Figure 5 (Standard), Figure 6 (Slim)				Figure 7 (Standard), Figure 8 (Slim)	

B1 4-axis NC Positioning Main Units

Spec. \ Model			B1-24M4T/J*	B1-40M4T/J*
Digital input	24VDC	High speed (50KHz)	8 points (4-axis single phase or A/B phase)	
		Medium (Total 5KHz)	6 points	8 points
		Low speed	—	8 points
Digital Output	Transistor (5~30 VDC)	High speed (50KHz)	8 points (4-axis single phase or A/B phase)	
		Low speed	2 points	8 points
Communication port		Built-in	1 port (Port0:RS232)	
		Expandable	2 ports (Port1~2,RS485 or RS232 or Ethernet)	
Calendar			Built-in	
Wiring mechanism			5mm European fixed terminal block	
Dimension			Figure 3 (Standard), Figure 4 (Slim))	Figure 5 (Standard), Figure 6 (Slim))

*J : Customized product

Left Side Communication Expansion Modules

Spec. \ Model	B1-CM25E	B1-CM55E
Network interface	10 Base T	
Network protocol	TCP, UDP, ICMP, ARP	
Application protocol	FATEK client and server mode, Modbus-TCP server mode	
PLC interface	Port 2	
PLC communication speed	9.6K / 19.2K / 38.4K / 57.6K / 115.2 K / 230.4 K	
Expansion communication interface	RS232 (Port1) RS485 (Port2)	RS485 (Port1, Port2)
Application IP port number	FATEK port number 500, Modbus-TCP 502 or customized	
Security protection	IP based access control	
Indicators	Internet RX, TX, LINK LEDs indicators	
Wiring mechanism	RJ45, 3-pin spring terminal block, DB9F	RJ45, 3-pin spring terminal block
Dimension	Figure 11 (Standard only)	

(Continue)

Spec. \ Model	B1-CM2	B1-CM22	B1-CM5	B1-CM55	B1-CM25
Communication interface	RS232(2)	RS232(1,2)	RS485(2)	RS485(1,2)	RS232(1)+RS485(2)
Communication status	Receive (RX) : Green LED, Transmit (TX) : Red LED				
Wiring mechanism	DB9F	DB9F	3-pin spring terminal block		DB9F，3-pin spring terminal block
Dimension	Figure 11(Standard), Figure 12 (Slim)				

Left Side Temperature/Analog I/O Expansion Modules

Spec. \ Model	B1-L4AD	B1-L2DA	B1-L2A2D	B1-L4NTC
Number of channels	4 channel input	2 channel output	2 channel input ＋ 2 channel output	4 channel temperature input
Resolution	12 bits			
Input / Output signal range	0~10V(voltage)，0~20mA(current)			100Ω ~ 100KΩ
Maximum resolution	2.44mV(voltage)，4.88μA(current)			—
Accuracy	±1%			
Conversion time	Conversion once for each scan			
Maximum input signal	±15V(voltage)，30mA(current)			—
Input impedance / Output load	Input impedance 100KΩ (voltage),125Ω (current) / Output load：2K~1MΩ (voltage),0~500Ω (current)			—
Isolation method	Non-isolation			
Wiring mechanism	3.81mm European fixed terminal block			
Dimension	Figure 13(Standard), Figure 14 (Slim)			Figure 13(Standard)

Right Side Digital I/O Expansion Modules

Spec. \ Model			B1-4YR	B1-4Y(T/J)	B1-8X	B1-8YR	B1-8Y(T/J)	B1-8XYR	B1-8XY(T/J)
Digital input	24VDC	Low speed	—	—	8	—	—	4	4
Digital output	Relay	2A	4	—	—	8	—	4	—
	Transistor	0.5A	—	4	—	—	8	—	4
Wiring mechanism			5mm European fixed terminal block						
Dimension			Figure 9 (Standard), Figure 10 (slim)						

(Continue)

Spec. \ Model			B1-16X	B1-16YR	B1-16Y(T/J)	B1-16XYR	B1-16XY(T/J)	B1-24XYR	B1-24XY(T/J)
Digital input	24VDC	Low speed	16	—	—	8	8	14	14
Digital output	Relay	2A	—	16	—	8	—	10	—
	Transistor	0.5A	—	—	16	—	8	—	10
Wiring mechanism			5mm European fixed terminal block						
Dimension			Figure 1 (Standard), Figure 2 (slim)					Figure 3 (Standard), Figure 4 (slim)	

(Continue)

Spec. \ Model			B1-40XYR	B1-40XY(T/J)	B1-60XYR	B1-60XY(T/J)
Digital input	24VDC	Low speed	24	24	36	36
Digital output	Relay	2A	16	—	24	—
	Transistor	0.5A	—	16	—	24
Wiring mechanism			5mm European fixed terminal block			
Dimension			Figure 5 (Standard), Figure 6 (slim)		Figure 7 (Standard), Figure 8 (slim)	

Right side Analog I/O Expansion Modules

Spec. \ Model		B1-6AD	B1-2DA
Input point		6 points input	2 points output
Input/Output value		12 bit	
Maximum resolution		1.22mV(Voltage),2.44μA(Current)	
Input/Output signal range	Voltage	-10 ~ +10V, -5 ~ +5V, 0 ~ 10V, 0~5V	
	Current	-20 ~ +20mA, -10 ~ +10mA, 0 ~ 20mA, 0 ~ 10mA	
Accuracy		±1%	
Input impedance		63.2KΩ(Voltage) 250Ω(Current)	—
Conversion time		Conversion once for each scan	
Maximum input signal		±12V(Voltage) ±24mA(Current)	—
Allowable load range		—	500 ~ 1MΩ(Voltage) 0 ~ 500Ω(Current)
Isolation method		Non-isolation	
Wiring mechanism		3.81mm European fixed terminal block	
Dimension		Figure 9 (Standard), Figure 10 (slim)	

Right side Temperature Measurement Expansion Modules

Spec. \ Model	B1-2TC/6TC	B1-6RTD
Number of input points	2 /6 points	6 points
Sensor type and temperature measurement range	J (-200~1200°C) E (-190~1000°C) K (-190~1300°C) T (-190~380°C) R (0~1800°C) B (350~1800°C) S (0~1700°C) N (-200~1000°C)	3-wire RTD sensor (JIS or DIN) Pt100(-200~850°C) Pt1000(-200~600°C)
Temperature compensation	Built-in cold junction compensation	—
Resolution	0.1°C	
Temperature refresh time	Conversion once for each scan	
Overall Precision	± (1%+1°C)	± 1%
Isolation method	Transform (power) and optical (signal) isolation, 500VAC, 1 minute, no isolation between each channel	
Power consumption	24VDC -15%/+20%,2W max.	
Wiring mechanism	3.81 mm European fixed terminal block	
Dimension	Figure 9 (Standard)	

FBs Compatible Peripheral (Refer to FBs-PLC Catalog for Detail Specifications)

Memory Pack	PWMDA Module	RFID card	Simple HMI	General Purpose Communication Converter		
FBs-PACK	PWMDA	CARD-H	FBs-PEP/PEPR	FBs-CM25C	FBs-CM5R	FBs-CM5H

Bluetooth Communication Module	USB Converter Cable	Port 0 Communication Cables			
FBs-B2C	FBs-U2C-MD-180	FBs-232P0-9F-150	FBs-232P0-9M-400	FBs-232P0-MD-200	FBs-232P0-MDR-200

DC24V Power Supply

1A	2A	3A	4A	5A	6A
ADP-24V-1A	ADP-24V-2A	ADP-24V-3A	ADP-24V-4A	ADP-24V-5A	ADP-24V-6A

Dimensions

Figure 1 10/14 points main units or expansion modules (standard)

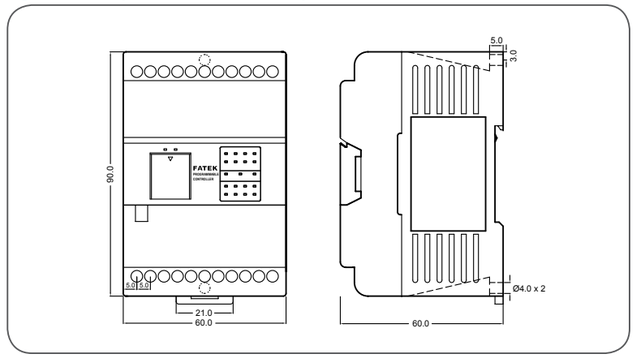

Figure 2 10/14 points units or expansion modules (slim)

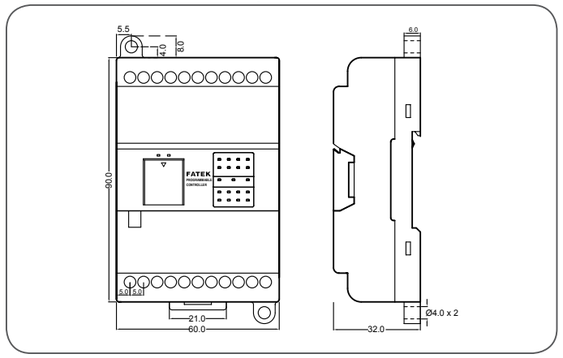

Figure 3 20/24 points main units or expansion modules (standard)

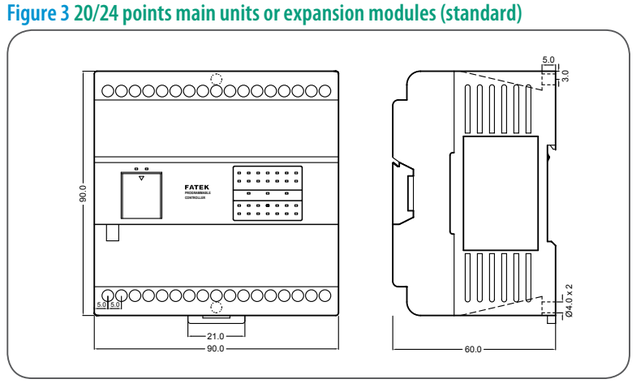

Figure 4 20/24 points main units or expansion modules (slim)

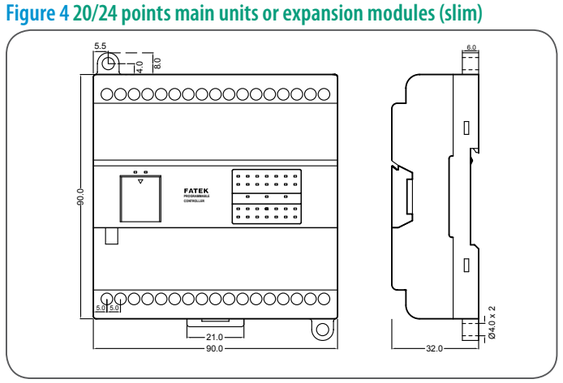

Figure 5 32/40 points main units or expansion modules (standard)

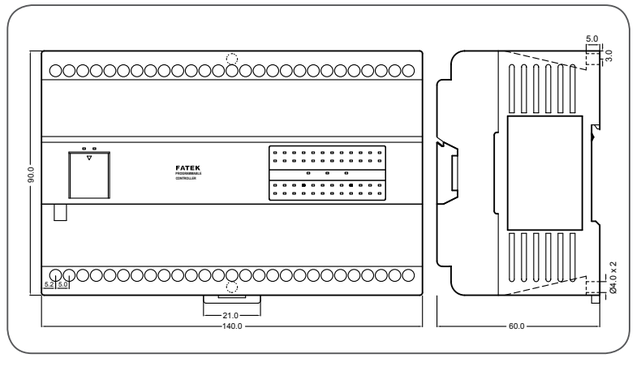

Figure 6 32/40 points main units of expansion modules (slim)

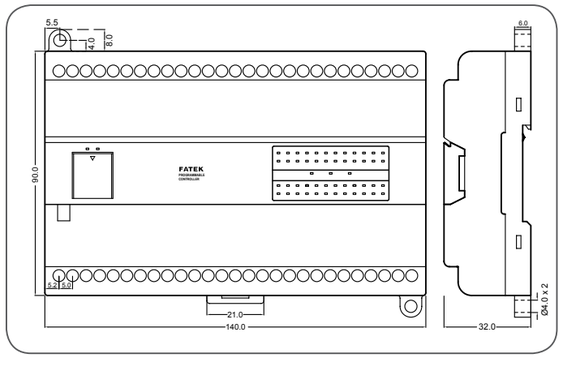

Figure 7 60 points main unit or expansion modules (standard)

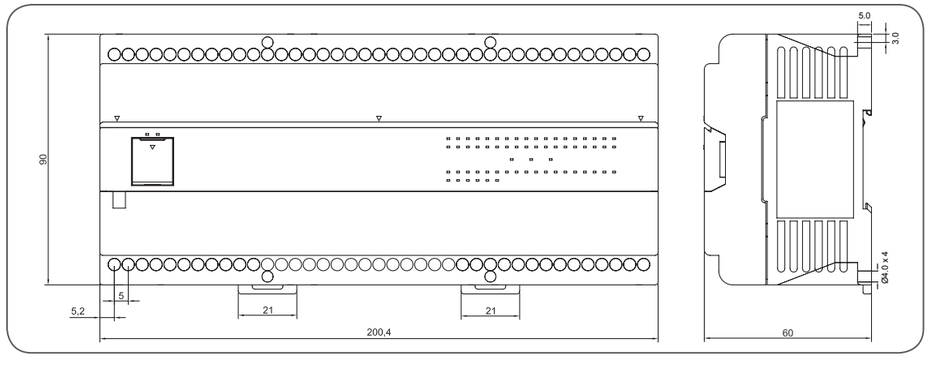

Figure 8 60 points main unit or expansion modules (Slim)

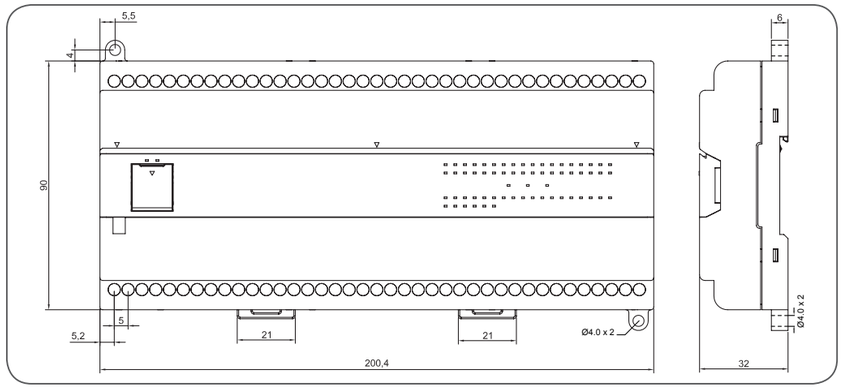

Figure 9 Right-side expansion (Standard)

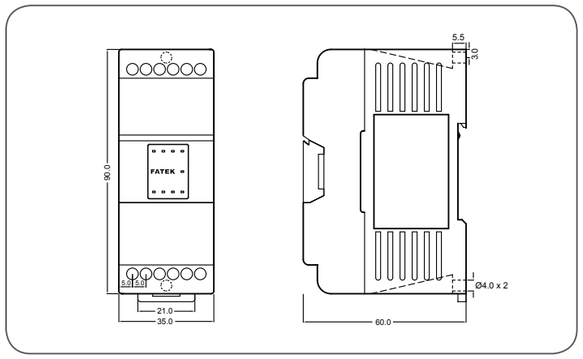

Figure 10 Right-side expansion (Slim)

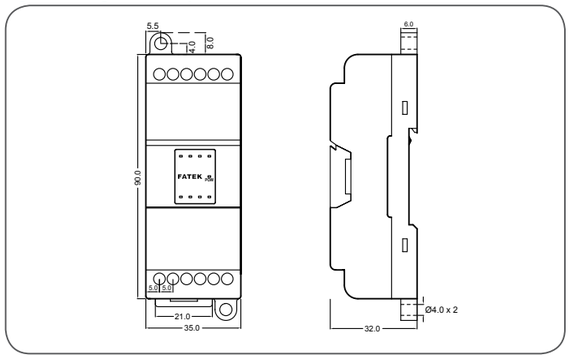

Figure 11 Left-side expansion (Standard)

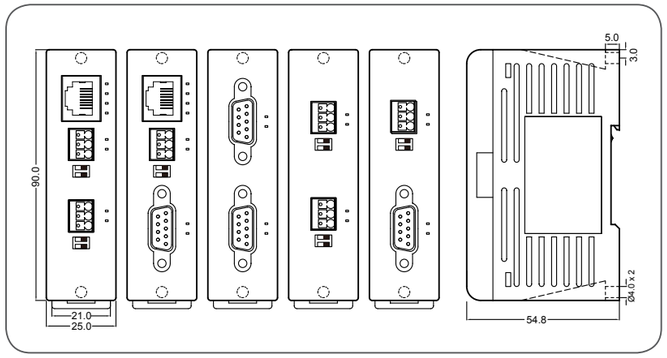

Figure 12 Left-side expansion (Slim)

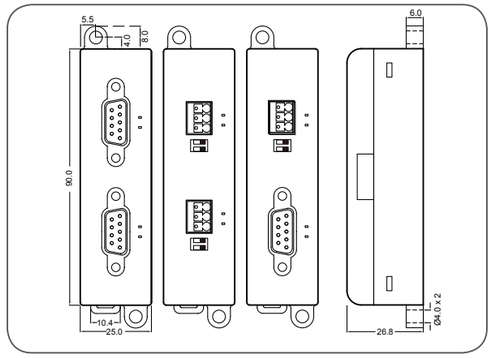

Figure 13 Left-side expansion (Standard)

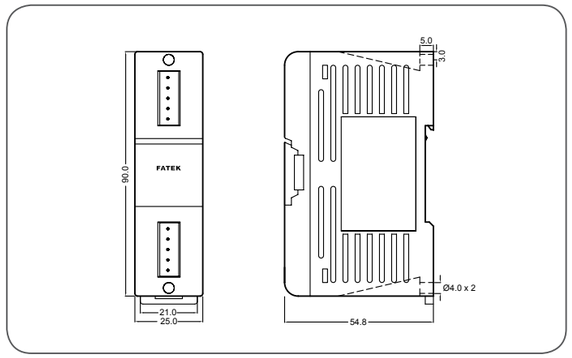

Figure 14 Left-segment (Slim)

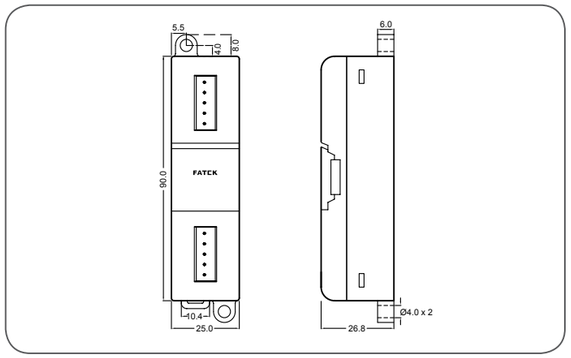

Model List

Item Name		Module	Specifications
Main Units	B1z Main Units	B1z-10M ◇ 25– ◎☆	6 points 24VDC digital input (4 points 50 KHz, 2 points total 5KHz), 4 points relay output or transistor output (2 points 50KHz), RS232(Port 0)+RS485(Port 2) communication ports, both sides are not expandable
		B1z-14M ◇ 25– ◎☆	8 points 24VDC digital input (4 points 50 KHz, 4 points total 5KHz), 6 points relay output or transistor output (2 points 50KHz), RS232(Port 0)+RS485(Port 2) communication ports, both sides are not expandable
		B1z-20M ◇ 25– ◎☆	12 points 24VDC digital input (6 points 50 KHz, 6 points total 5KHz), 8 points relay output or transistor output (4 points 50KHz), RS232(Port 0)+RS485(Port 2) communication ports, both sides are not expandable
		B1z-24M ◇ 25– ◎☆	14 points 24VDC digital input (8 points 50 KHz, 6 points total 5KHz), 10 points relay output or transistor output (4 points 50KHz), RS232(Port 0)+RS485(Port 2) communication ports, both sides are not expandable
		B1z-32M ◇ 25– ◎☆	20 points 24VDC digital input (8 points 50 KHz, 8 points total 5KHz), 12 points relay output or transistor output (6 points 50KHz), RS232(Port 0)+RS485(Port 2) communication ports, both sides are not expandable
		B1z-40M ◇ 25– ◎☆	24 points 24VDC digital input (8 points 50 KHz, 8 points total 5KHz), 16 points relay output or transistor output (6 points 50KHz), RS232(Port 0)+RS485(Port 2) communication ports, both sides are not expandable
		B1z-60M ◇ 25– ◎☆	36 points 24VDC digital input (8 points 50 KHz, 8 points total 5KHz), 24 points relay output or transistor output (8 points 50KHz), RS232(Port 0)+RS485(Port 2) communication ports, both sides are not expandable
	B1 Main Units	B1-10M ◇ 2– ◎☆	6 points 24VDC digital input (4 points 50 KHz, 2 points total 5KHz), 4 points relay output or transistor output (2 points 50KHz), RS232(Port 0) communication port
		B1-14M ◇ 2– ◎☆	8 points 24VDC digital input (4 points 50 KHz, 4 points total 5KHz), 6 points relay output or transistor output (2 points 50KHz), RS232(Port 0) communication port
		B1-20M ◇ 2– ◎☆	12 points 24VDC digital input (6 points 50 KHz, 6 points total 5KHz), 8 points relay output or transistor output (4 points 50KHz), RS232(Port 0) communication port
		B1-24M ◇ 2– ◎☆	14 points 24VDC digital input (8 points 50 KHz, 6 points total 5KHz), 10 points relay output or transistor output (4 points 50KHz), RS232(Port 0) communication port
		B1-32M ◇ 2– ◎☆	20 points 24VDC digital input (8 points 50 KHz, 8 points total 5KHz), 12 points relay output or transistor output (6 points 50KHz), RS232(Port 0) communication port
		B1-40M ◇ 2– ◎☆	24 points 24VDC digital input (8 points 50 KHz, 8 points total 5KHz), 16 points relay output or transistor output (6 points 50KHz), RS232(Port 0) communication port
		B1-60M ◇ 2– ◎☆	36 points 24VDC digital input (8 points 50 KHz, 8 points total 5KHz), 24 points relay output or transistor output (8 points 50KHz), RS232(Port 0) communication port
	4-axis NC positioning Modules	B1-24M4(T/J)2–D24 ☆	14 points 24VDC digital input (8 points 50 KHz, 6 points total 5KHz), 10 points transistor output (8 points 50KHz, 0.1A), RS232(Port 0) communication port, J is custom product
		B1-40M4(T/J)2–D24 ☆	24 points 24VDC digital input (8 points 50 KHz, 8 points total 5KHz), 16 points transistor output (8 points 50KHz, 0.1A), RS232(Port 0) communication port, J is custom product
Left Side Expansion Module	Communication Modules	B1-CM25E	1 port RS232 (Port 1) + 1 port RS485 (Port 2) + Ethernet network interface communication module
		B1-CM55E	2 ports RS485 (Port 1, Port 2) + Ethernet network interface communication module
		B1-CM2 ☆	1 port RS232 (Port 2) communication module
		B1-CM22 ☆	2 port RS232 (Port1, Port2) communication module
		B1-CM5 ☆	1 port RS485 (Port 2) communication module
		B1-CM55 ☆	2 port RS485 (Port1, Port2) communication module
		B1-CM25 ☆	1 port RS232 (Port 1) + 1 port RS485 (Port 2) communication module
	LAIO Modules	B1-L2DA ☆	Non-isolated 2 channels, 12-bit analog output module (0~10V or 0~20mA)
		B1-L4AD ☆	Non-isolated 4 channels, 12-bit analog input module (0~10V or 0~20mA)
		B1-L2A2D ☆	Non-isolated 2channels, 12-bit analog input + 2 channels, 12-bit analog output combo analog module (0~10V or0~20mA)
	Temperature Modules	B1-L4NTC ☆	4 channels, NTC temperature input module, 12-bit resolution, measuring range 100Ω~100KΩ
Right Side Expansion Module	DIO Expansion Modules	B1-4Y ◇☆	4 points relay or transistor output
		B1-8X ☆	8 points 24VDC digital input
		B1-8Y ◇☆	8 points relay or transistor output
		B1-8XY ◇☆	4 points 24VDC digital input, 4 points relay or transistor output
		B1-16X ☆	16 points 24VDC digital input
		B1-16Y ◇☆	16 points relay or transistor output
		B1-16XY ◇☆	8 points 24VDC digital input, 8 points relay or transistor output
		B1-24XY ◇☆	14 points 24VDC digital input, 10 points relay or transistor output
		B1-40XY ◇☆	24 points 24VDC digital input, 16 points relay or transistor output
		B1-60XY ◇☆	36 points 24VDC digital input, 24 points relay or transistor output
	AIO Modules	B1-6AD ☆	Non-isolated 6 channels, 12-bit analog input module (Voltage:-10~10V,-5~5V,0~5V Current: -20~20mA,-10~10mA,0~20mA,0~10mA)
		B1-2DA ☆	Non-isolated 2 channels, 12-bit analog output module (Voltage:-10~10V,-5~5V,0~5V Current: -20~20mA,-10~10mA,0~20mA,0~10mA)
	Temperature Modules	B1-2/6TC	2/6 channels, thermocouple temperature input module with 0.1°C resolution, J, K, R, S, E, T, B, N thermocouple sensor
		B1-6RTD	6 channels, RTD temperature input module with 0.1°C resolution, 3-wire RTD sensor (PT100 or PT1000)
FBs Compatible Peripheral	Memory Pack	FBs-PACK	PLC program memory pack with 20K Words program, 20K Words register
	PWMDA Module	PWMDA	10-bit single channel pules width modulation (PWM) 0~10V analog output (AO) module
	RFID Card	CARD-H	General purpose RFID (ISO-14443A Standard) (for FBs-PEPR)
	Simple HMI	FBs-PEP/PEPR	Multi-characters with graphics-based Parameter Entry Panel, built-in RFID Read/Write module with PEPR
	General Purpose Communication Converters	FBs-CM25C	General purpose RS232 to RS485/RS422 communication interface converter with optical isolation
		FBs-CM5R	General purpose RS485 repeater with optical isolation
		FBs-CM5H	General purpose 4 ports RS485 HUB with optical isolation, RS485 can be connected as star connection
	Bluetooth Communication Module	FBs-B2C	Bluetooth Module for PLC Main Unit Port 0
	USB Communication Converter	FBs-U2C-MD-180	Communication converter cable with standard USB AM connector to RS232 Mini-DIN 4M connector (used in standard PC USB to FBs main unit Port0 RS232), length 180cm
	Port 0 Communication Cables	FBs-232P0-9F-150	Mini-DIN 4M to DB9F communication cable (FBs main unit Port 0 RS232 connect to standard DB9M), length 150cm
		FBs-232P0-9M-400	Mini-DIN 4M to DB9M communication cable (FBs main unit Port 0 RS232 connect to standard DB9F), length 400cm
		FBs-232P0-MD-200	Mini-DIN 4M to Mini-DIN 4M communication cable (FBs main unit Port 0 RS232 connect to FBs-PEP/PEPR), length 200cm
		FBs-232P0-MDR-200	Mini-DIN 4M to 90° Mini-DIN 4M communication cable (FBs main unit Port 0 RS232 connect to FBs-PEP/PEPR), length 200cm
DC24V Power Supply		ADP-24V-1A	90~240VAC Input Voltage, 50/60Hz, Output Voltage: 24VDC, Output Current: 1A, DIN-RAIL Type
		ADP-24V-2A	90~240VAC Input Voltage, 50/60Hz, Output Voltage: 24VDC, Output Current: 2A, DIN-RAIL Type
		ADP-24V-3A	90~240VAC Input Voltage, 50/60Hz, Output Voltage: 24VDC, Output Current: 3A, DIN-RAIL Type
		ADP-24V-4A	90~240VAC Input Voltage, 50/60Hz, Output Voltage: 24VDC, Output Current: 4A, DIN-RAIL Type
		ADP-24V-5A	90~240VAC Input Voltage, 50/60Hz, Output Voltage: 24VDC, Output Current: 5A, DIN-RAIL Type
		ADP-24V-6A	90~240VAC Input Voltage, 50/60Hz, Output Voltage: 24VDC, Output Current: 6A, DIN-RAIL Type

◇：R – Relay output, T. – Transistor SINK (NPN) output, J. – SOURCE (PNP) output
◎：D24 – 21.6~28.8 VDC power supply, AC – 85~264 VAC power supply (customized products)
☆：Blank – Standard case, -S – Slim case (units with AC power supply have no slim case)